EVI-N215WAC

21.5" Fanless Industrial Panel PC
Intel® Alder Lake-N N97 processor





Features

- Industrial-grade 21.5" FHD LCD panel with 30k backlight lifetime
- Optical bonding PCAP multipoint touch screen
- IP66 grade aluminum alloy front panel
- Intel® Alder Lake-N N97 Quad-core 2.0GHz processor
- 1 x DDR5 SDRAM, max.32GB, 1 x M.2 2280 NVMe or SATA SSD
- 3 x Intel® 226-V 2.5GbE Ethernet, support WoL and PXE
- 2 x RS232/422/485, RS485 support automatic flow control
- Support TPM2.0 hardware security
- Supports embedded / VESA 100mm x 100mm mounting holes
- 9V to 36V DC Wide Range Power Input，Supporting OVP / OCP / RPP

Specifications

System	
CPU	Intel® Alder Lake-N N97 Quad-core 2.0GHz , TDP 12W
L2 Cache	2.0 MB
System Chipset	Integrated with Intel® SoC
Memory	1 x DDR5L 4800MHz 8GB, MAX 32GB
Harddisk	1 x M.2 120G SSD (250G / 500G / 2TB SSD) / 1 x 2.5" SATA
Graphics	Intel® UHD Graphics
Network	Intel® 226-V GbE LAN
Audio	Realtek ACL897 Audio controller
TPM	TPM 2.0
Watchdog Timer	Software Programmable Supports 1~255 sec. System Reset
Operation System	Windows 10 / 11， Linux, Ubuntu
I / O	
VIDEO	1 x H-DMI
Ethernet	3 x LAN （10/100/1000/2500 Mbps）
USB	4 x USB 3.0
COM	2 x RS-232 / 422 / 485 (Adjustable through BIOS)
Audio	1x Audio_out & Mic_in
Wireless Network	Optional （WiFi / Bluetooth / 4G / 5G ）
Expansion	
M.2	1*M.2 (Key-E, 2230, PCIe+USB, Wifi+BT)
	1*M.2 (Key-B, 3042/3052, PCIe/ USB 3.0+USB2.0, 4G/5G)
	1*M.2 (Key-M, 2280, SATA / SSD)
SIM Socket	1x SIM Socket
Display	
LCD Size	21.5" (16:9)
Resolution	1920 x 1080 (FHD)
Brightness (cd/m²)	400 cd/m2
Contrast Ratio	1000:1
Backlight MTBF	50000 hrs
Viewing Angle	89 / 89 / 89 / 89 (CR≥10) (L / R / U / D)
Touch screen	
Touch Type	Optical bonding PCAP Touch
Surface Hardness	≥7H

We reserve the right to change specifications and product descriptions at any time without prior notice.

Power	
Power Adapter	1 x Optional AC/DC 12V/5A , 60W
Power Mode	Support AT, ATX Mode
Power Input	2-Pin Terminal Block Connector with Power Input 9~36VDC
Power Protection	OVP (Over Voltage Protection) | OCP (Over Current Protection) | RPP (Reverse Polarity Protection)
Power Consumption	≦35W
Physical	
Material	Aluminum alloy panel, anodized treatment
Mounting	Stand / Wall / VESA / Panel
Dimension (W x H x D)	538 x 330 x 60 mm
Cut-out Size	520 x 312 mm
Packing Size	630 x 190 x 480 mm
Weight (Net)	6 kg
Environment	
Operating Temperature	-20~70°C (-4~158°F)
Storage Temperature	-30~80°C (-22~176°F)
Relative Humidity	5%~95%@40°C, non-condensing
Vibration Protection	1.5 Grms, IEC 60068-2-64, random, 5 ~ 500 Hz, 1 hr/axis
IP Level	Front Panel IP66
EMC	CE, FCC, UL, KC, Class A, ROHS , IEC / EN 62368-1

Dimension & I/O

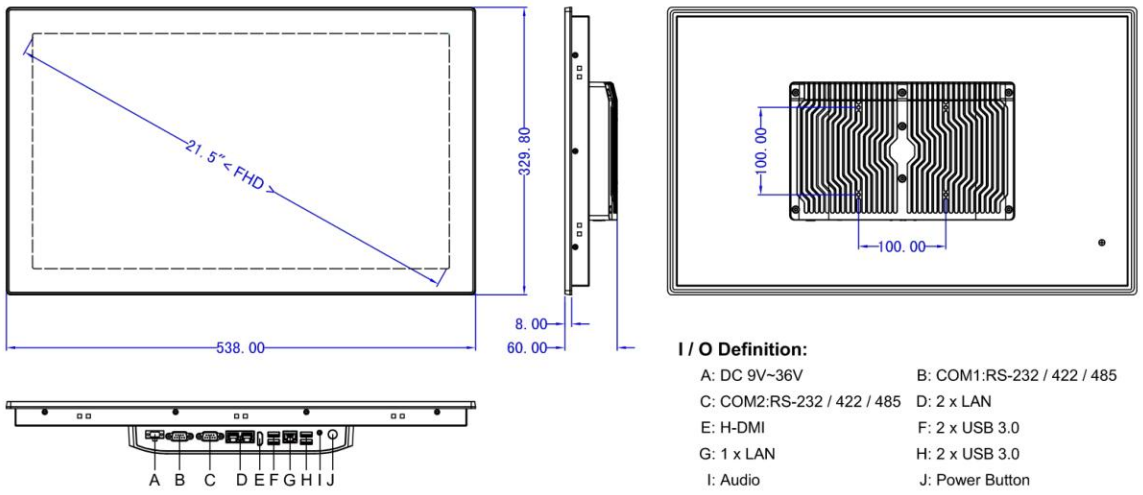

I / O Definition:

A: DC 9V~36V	B: COM1:RS-232 / 422 / 485
C: COM2:RS-232 / 422 / 485	D: 2 x LAN
E: H-DMI	F: 2 x USB 3.0
G: 1 x LAN	H: 2 x USB 3.0
I: Audio	J: Power Button

Panel Cutout Dimensions: 520 x 312 mm (20.47 x 12.28 in)

Ordering info

Available models	Description
EVI-C215WAC	21.5" Fanless Industrial Panel PC Intel® Elkhart Lake Celeron J6412 2.0GHz Processor With Capcice touch
EVI-X215WAC	21.5" Fanless Industrial Panel PC Intel® Elkhart Lake Atom X6425E 2.0GHz Processor With Capcice touch
EVI-N215WAC	21.5" Fanless Industrial Panel PC Intel® Alder Lake-N N97 2.0GHz Processor With Capcice touch

Packing list

1 x Standard product
1 x 60W PSU (Power Supply)
1 x Power cable & plug
8 x Panel mount metal clips

E-Mail: contact@evi.biz **URL:** https://www.evistore.fr/smartpanel.html
TEL: +33 3 57 48 03 26 | EVI SAS, 4 avenue de l'Opéra, 75001 Paris, France