EVI-J019SAR

19" Fanless Industrial Panel PC
Intel® Bay Trail Celeron J1900





Features

- Industrial-grade 19" SXGA LCD panel with 50k backlight lifetime
- High precision 5-wires resistive touch, EETI controller
- IP65 grade aluminum alloy front panel
- Intel® Celeron® J1900 quad-core 2.0 GHz processor
- 1 x DDR3 SDRAM, max.8GB, 1 x mSATA / 1 x 2.5" SATA SSD
- 2 x Intel® 211 1GbE Ethernet, support WoL and PXE
- 2 x RS232/422/485, RS485 support automatic flow control
- Support TPM2.0 hardware security
- Supports embedded / VESA 100mm x 100mm mounting holes
- 9V to 36V DC Wide Range Power Input，Supporting OVP / OCP / RPP

Specifications

System	
CPU	Intel® Bay Trail Celeron J1900 Quad-core 2.0GHz, TDP 10W
L2 Cache	2MB
System Chipset	Integrated with Intel® SoC
Memory	1 x DDR3L 1333MHz 4GB, Up to 8GB
Harddisk	1 x mSATA 128G SSD （250G / 500G / 1TB SSD) / 1 x 2.5" SATA
Graphics	Intel HD Graphics
Network	Intel® I211-AT GbE LAN
Audio	Realtek ACL662 Audio controller
TPM	TPM 2.0
Watchdog Timer	Software Programmable Supports 1~255 sec. System Reset
Operation System	Windows 7 / 8 / 10， Linux, Ubuntu
I / O	
VIDEO	1 x H-DMI
Ethernet	2 x LAN （10/100/1000 Mbps）
USB	3 x USB2.0 / 1 x USB3.0
COM	2 x RS-232 / 422 / 485 (Adjustable through BIOS)
Audio	1x Audio_out & Mic_in
Wireless Network	Optional （WiFi / Bluetooth / 4G ）
Expansion	
M.2	1*M.2 (Key-E, 2230, PCIe+USB, Wifi+BT)
	1*M.2 (Key-B, 3042, USB2.0, 4G)
SIM Socket	1x SIM Socket
Display	
LCD Size	19" (5:4)
Resolution	1280 x 1024
Brightness (cd/m²)	450 cd/m2
Contrast Ratio	1000:1
Backlight MTBF	50000 hrs
Viewing Angle	89 / 89 / 89 / 89 (CR≥10) (L / R / U / D)
Touch screen	
Touch Type	5 Wire Resistive touch
Surface Hardness	≥3H

Power	
Power Adapter	1 x Optional AC/DC 12V/5A , 60W
Power Mode	Support AT, ATX Mode
Power Input	2-pin Terminal Block Connector with Power Input 9~36VDC
Power Protection	OVP (Over Voltage Protection) | OCP (Over Current Protection) | RPP (Reverse Polarity Protection)
Power Consumption	≦35W
Physical	
Material	Aluminum alloy panel, anodized treatment
Mounting	Stand / Wall / VESA / Panel
Dimension (W x H x D)	434 x 359 x 60 mm
Cut-out Size	420 x 345 mm
Packing Size	500 x 180 x 450 mm
Weight (Net)	5.5 KG
Environment	
Operating Temperature	-20~70°C (-4~158°F)
Storage Temperature	-30~80°C (-22~176°F)
Relative Humidity	5%~95%@40°C, non-condensing
Vibration Protection	1.5 Grms, IEC 60068-2-64, random, 5 ~ 500 Hz, 1 hr/axis
IP Level	Front Panel IP65
EMC	CE, FCC, UL, KC, Class A, ROHS , IEC / EN 62368-1

Dimension & I/O

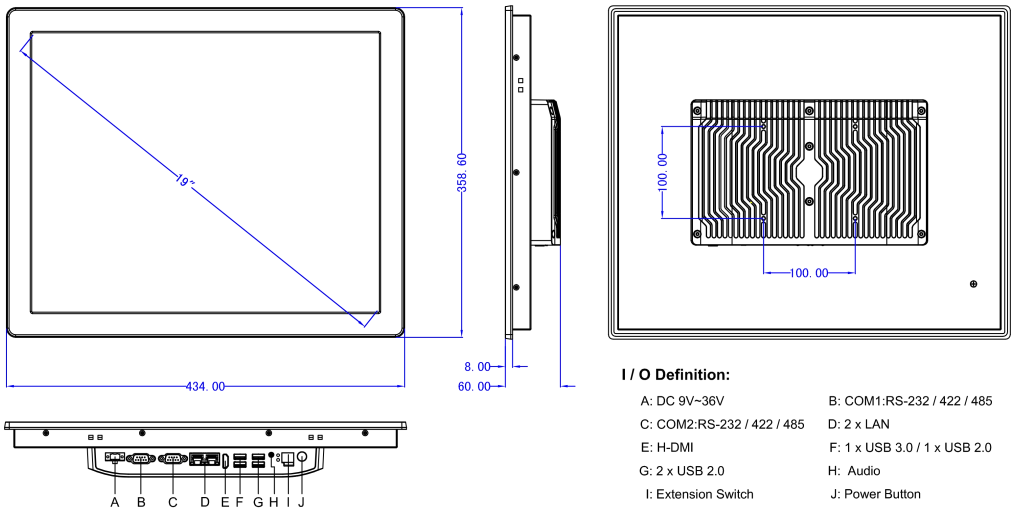

I / O Definition:

A: DC 9V~36V	B: COM1:RS-232 / 422 / 485
C: COM2:RS-232 / 422 / 485	D: 2 x LAN
E: H-DMI	F: 1 x USB 3.0 / 1 x USB 2.0
G: 2 x USB 2.0	H: Audio
I: Extension Switch	J: Power Button

Panel Cutout Dimensions: 420 x 345 mm (16.54 x 13.58 in)

Ordering info

Available models	Description
EVI-J019SAR	19" Fanless Industrial Panel PC Intel® Bay Trail Celeron J1900 2.0GHz Processor With Resistive touch

Packing list

1 x Standard product
1 x Utility DVD Driver
1 x 60W PSU (Power Supply)
1 x Power cable & plug
8 x Panel mount metal clips

E-Mail: contact@evi.biz **URL:** https://www.evistore.fr/smartpanel.html
TEL: +33 3 57 48 03 26 EVI SAS, 4 avenue de l'Opéra, 75001 Paris, France