# EVI-J015SRC

**15" Fanless Industrial Panel PC**
**Intel® Bay Trail Celeron J1900**





## Features

- Industrial-grade 15" XGA LCD panel with 50k backlight lifetime
- True-flat touchscreen with multi-touch projected capacitive control
- IP66 grade aluminum alloy front panel
- Intel® Celeron® J1900 quad-core 2.0 GHz processor
- 1 x DDR3 SDRAM, max.8GB, 1 x mSATA / 1 x 2.5" SATA SSD
- 2 x Intel® 211 1GbE Ethernet, support WoL and PXE
- 2 x RS232/422/485, RS485 support automatic flow control
- Support TPM2.0 hardware security
- Supports 19 inch Rack mount / VESA 100mm x 100mm mounting holes
- 9V to 36V DC Wide Range Power Input，Supporting OVP / OCP / RPP

## Specifications

| | |
|---|---|
| **System** | |
| CPU | Intel® Bay Trail Celeron J1900 Quad-core 2.0GHz, TDP 10W |
| L2 Cache | 2MB |
| System Chipset | Integrated with Intel® SoC |
| Memory | 1 x DDR3L 1333MHz 4GB, Up to 8GB |
| Harddisk | 1 x mSATA 128G SSD（250G / 500G / 1TB SSD) / 1 x 2.5" SATA |
| Graphics | Intel HD Graphics |
| Network | Intel® I211-AT GbE LAN |
| Audio | Realtek ACL662 Audio controller |
| TPM | TPM 2.0 |
| Watchdog Timer | Software Programmable Supports 1~255 sec. System Reset |
| Operation System | Windows 7 / 8 / 10， Linux, Ubuntu |
| **I / O** | |
| VIDEO | 1 x H-DMI |
| Ethernet | 2 x LAN （10/100/1000 Mbps） |
| USB | 3 x USB2.0 / 1 x USB3.0 |
| COM | 2 x RS-232 / 422 / 485 ( Adjustable through BIOS ) |
| Audio | 1x Audio_out & Mic_in |
| Wireless Network | Optional （WiFi / Bluetooth / 4G ） |
| **Expansion** | |
| M.2 | 1*M.2 ( Key-E, 2230, PCIe+USB, Wifi+BT ) |
| | 1*M.2 ( Key-B, 3042, USB2.0, 4G ) |
| SIM Socket | 1x SIM Socket |
| **Display** | |
| LCD Size | 15" ( 4:3 ) |
| Resolution | 1024 x 768 |
| Brightness (cd/m²) | 350 cd/m2 |
| Contrast Ratio | 1000:1 |
| Backlight MTBF | 50000 hrs |
| Viewing Angle | 89 / 89 / 89 / 89 (CR≥10) ( L / R / U / D ) |
| **Touch screen** | |
| Touch Type | 10 point PCAP |
| Surface Hardness | ≥7H |

| Power | |
|---|---|
| Power Adapter | 1 x Optional AC/DC 12V/5A , 60W |
| Power Mode | Support AT, ATX Mode |
| Power Input | 2-pin Terminal Block Connector with Power Input 9~36VDC |
| Power Protection | OVP (Over Voltage Protection) \| OCP (Over Current Protection) \| RPP (Reverse Polarity Protection) |
| Power Consumption | ≦35W |
| **Physical** | |
| Material | Aluminum alloy panel, anodized treatment |
| Mounting | 19.0-inch Rack Mount / Stand / Wall / VESA / Panel |
| Dimension (W x H x D) | 482 x 310 x 60 mm |
| Height | 7U |
| Packing Size | 500 x 180 x 450 mm |
| Weight (Net) | 4.5 KG |
| **Environment** | |
| Operating Temperature | -20~70°C ( -4~158°F ) |
| Storage Temperature | -30~80°C (-22~176°F) |
| Relative Humidity | 5%~95%@40°C, non-condensing |
| Vibration Protection | 1.5 Grms, IEC 60068-2-64, random, 5 ~ 500 Hz, 1 hr/axis |
| IP Level | Front Panel IP66 |
| EMC | CE, FCC, UL, KC, Class A, ROHS , IEC / EN 62368-1 |

## Dimension & I/O

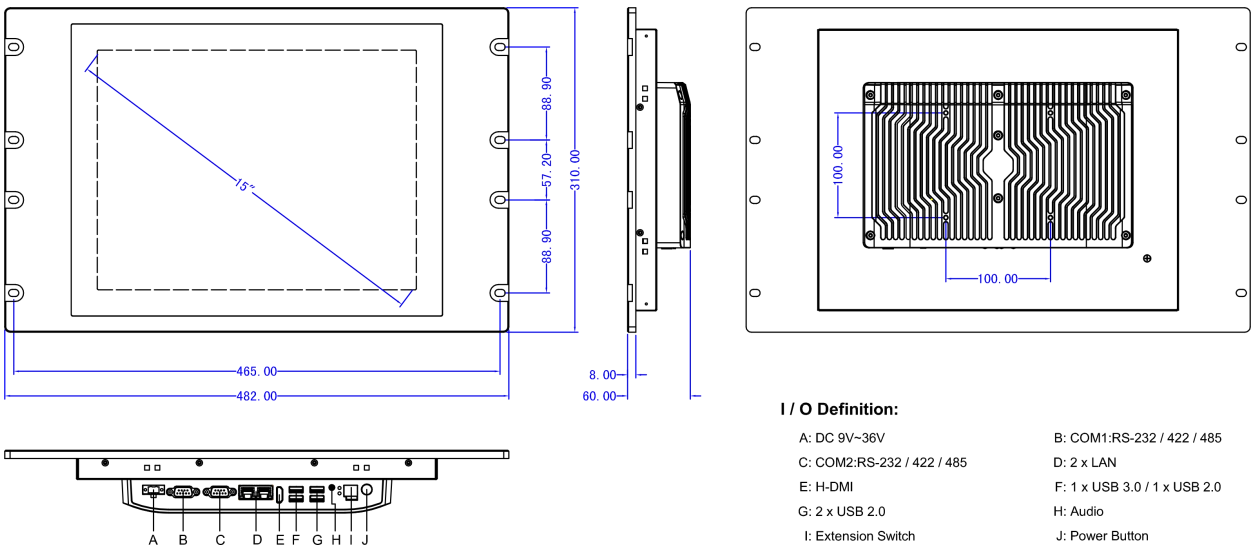


**I / O Definition:**

| | |
|---|---|
| A: DC 9V~36V | B: COM1:RS-232 / 422 / 485 |
| C: COM2:RS-232 / 422 / 485 | D: 2 x LAN |
| E: H-DMI | F: 1 x USB 3.0 / 1 x USB 2.0 |
| G: 2 x USB 2.0 | H: Audio |
| I: Extension Switch | J: Power Button |

## Ordering info

| Available models | Description |
|---|---|
| EVI-J015SRC | 15" Fanless Industrial Panel PC Intel® Bay Trail Celeron J1900 2.0GHz Processor With Capcice touch |

## Packing list

| |
|---|
| 1 x Standard product |
| 1 x Utility DVD Driver |
| 1 x 60W PSU (Power Supply) |
| 1 x Power cable & plug |
| 8 x Panel mount metal clips |

**E-Mail:** contact@evi.biz **URL:** https://www.evistore.fr/smartpanel.html
**TEL:** +33 3 57 48 03 26 | EVI SAS, 4 avenue de l'Opéra, 75001 Paris, France