EVI-173WAC-12th

12th Generation Intel® Core·
i3-1215U / i5-1235U / i7-1255U processor





Features

- Industrial-grade 17.3" FHD LCD panel with 50k backlight lifetime
- True-flat touchscreen with multi-touch projected capacitive control
- IP66 grade aluminum alloy front panel
- 12th Gen Intel® Whiskey Lake Core™ i3 / i5 / i7 Processor
- 2 x DDR5 SDRAM, max.64GB, 2 x M.2 2280 NVMe or SATA SSD
- 2 x Intel® 226-V 2.5GbE,1 x Intel® 219 1GbE Ethernet, WoL and PXE
- 2 x RS232/422/485, RS485 support automatic flow control
- Supports TPM2.0 security encryption and Intel vPro® Essentials
- Supports embedded / VESA 100mm x 100mm mounting holes
- 9V to 36V DC Wide Range Power Input，Supporting OVP / OCP / RPP

Specifications

System			
CPU	12th Gen Intel® Core™ i3-1215U	12th Gen Intel® Core™ i5-1235U	12th Gen Intel® Core™ i7-1255U
L3 Cache	10MB	12MB	12MB
TDP	15W	15W	15W
Graphics	Intel® UHD Graphics	Intel® Iris® Xe Graphics	Intel® Iris® Xe Graphics
System Chipset	Integrated With Intel® SoC		
Memory	2 x DDR5 4800MHz 8GB, Up to 64GB		
Harddisk	2 x M.2 120G SSD (250G / 500G / 2TB SSD)		
Network	2 x Intel® I226, 2.5GbE / 1 x Intel® I219, 1GbE		
Audio	Realtek ALC897 Audio controller		
TPM	TPM 2.0		
Watchdog Timer	255 Timer Levels, Set up by Software		
Operation System	Windows 10 / 11， Linux, Ubuntu		
I / O			
VIDEO	1 x H-DMI		
Ethernet	3 x RJ45		
USB	4 x USB 3.2 / 1 x Type-C x 1 (USB 3.0 Gen 2, DP 1.4)		
COM	2 x RS-232 / 422 / 485 (Adjustable through BIOS)		
Audio	1x Audio_out & Mic_in		
Wireless Network	Optional (WiFi / Bluetooth / 4G / 5G)		
Expansion			
M.2	1*M.2 (Key-E, 2230, PCIe+USB, Wifi+BT)		
	1*M.2 (Key-B, 3042/3052, PCIe/ USB 3.0+USB2.0, 4G/5G)		
	2*M.2 (Key-M, 2280, NVMe/ SATA, SSD)		
SIM Socket	1x SIM Socket		
Display			
LCD Size	17.3" (16:9)		
Resolution	1920 x 1080 (FHD)		
Brightness (cd/m²)	400		
Contrast Ratio	600:1		
Backlight MTBF	50,000 hrs (LED Backlight)		
Viewing Angle	80 / 80 / 60 / 80 (CR≥10) (L / R / U / D)		
Touch screen			
Touch Type	Projected Capacitive Multi-touch		
Surface Hardness	≥7H		

Power	
Power Adapter	1 x Optional AC/DC 12V/5A , 60W
Power Mode	Support AT, ATX Mode
Power Input	9~36VDC，2-Pin Terminal Block Connector with Power Input
Power Protection	OVP (Over Voltage Protection) ｜ OCP (Over Current Protection) ｜ RPP（Reverse Polarity Protectio
Power Consumption	≦45W
Physical	
Material	Aluminum alloy panel, anodized treatment
Mounting	Stand / Wall / VESA / Panel
Dimension (W x H x D)	441 x 274 x 65 mm
Cut-out Size	427 x 260 mm
Packing Size	500 x 180 x 450 mm
Weight (Net)	4.6KG
Environment	
Operating Temperature	-20~70°C （-4~158°F ）
Storage Temperature	-30~80°C (-22~176°F)
Relative Humidity	5%~95%@40°C, non-condensing
Vibration Protection	1.5 Grms, IEC 60068-2-64, random, 5 ~ 500 Hz, 1 hr/axis
IP Level	Front Panel IP66
EMC	CE, FCC，KC ，Class A，ROHS ，IEC， EN 62368-1

Dimension & I/O

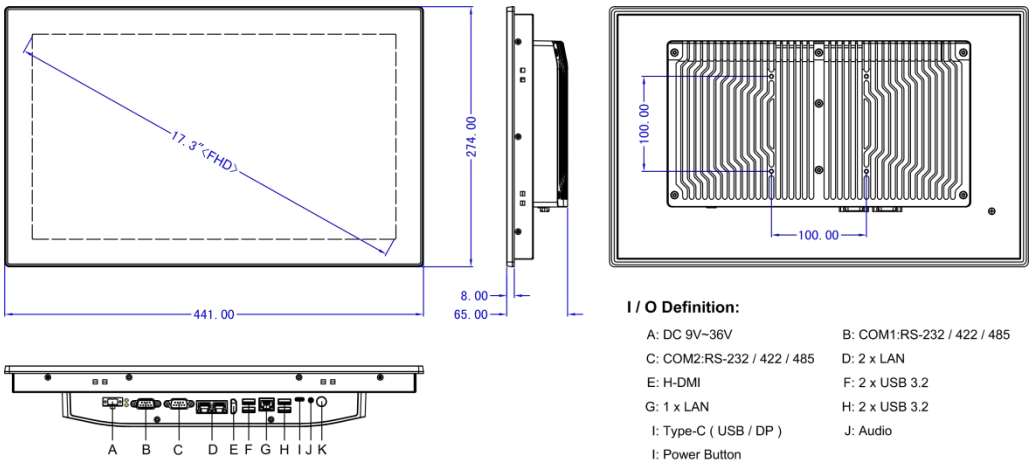

I / O Definition:

A: DC 9V~36V	B: COM1:RS-232 / 422 / 485
C: COM2:RS-232 / 422 / 485	D: 2 x LAN
E: H-DMI	F: 2 x USB 3.2
G: 1 x LAN	H: 2 x USB 3.2
I: Type-C (USB / DP)	J: Audio
I: Power Button	

Panel Cutout Dimensions: 427 x 260 mm (16.82 x 10.24 in)

Ordering info

Available models	Description
EVI-3173WAC	17.3" Fanless Industrial Panel PC 12th Generation Intel® Core™ i3-1215U 1.2GHz Processor With Capcice touch
EVI-5173WAC	17.3" Fanless Industrial Panel PC 12th Generation Intel® Core™ i5-1235U 1.3GHz Processor With Capcice touch
EVI-7173WAC	17.3" Fanless Industrial Panel PC 12th Generation Intel® Core™ i7-1255U 1.7GHz Processor With Capcice touch

Packing list

1 x Standard product
1 x 60W PSU (Power Supply)
1 x Power cable & plug
10 x Panel mount metal clips

E-Mail: contact@evi.biz URL: https://www.evistore.fr/smartpanel.html
TEL: +33 3 57 48 03 26 ｜ EVI SAS, 4 avenue de l'Opéra, 75001 Paris, France