EVI-15SRC

8th / 10th Gen Intel® Alder Lake Core·
i3-8145U / i5-10210U / i7-8565U processor





Features

- Industrial-grade 15" XGA LCD panel with 50k backlight lifetime
- True-flat touchscreen with multi-touch projected capacitive control
- IP66 grade aluminum alloy front panel
- 8th / 10th Gen Intel® Whiskey Lake Core™ i3 / i5 / i7 Processor
- 2 x DDR4 SDRAM, max.64GB, 1 x M.2 2280 / 1 x mSATA SSD
- 2 x Intel® 211 1GbE Ethernet, support WoL and PXE
- 2 x RS232/422/485, RS485 support automatic flow control
- Support TPM2.0 hardware security
- Supports 19 inch Rack mount / VESA 100mm x 100mm mounting holes
- 9V to 36V DC Wide Range Power Input，Supporting OVP / OCP / RPP

Specifications

System			
CPU	8th Gen Intel® Core™ i3-8145U	10th Gen Intel® Core™ i5-10210U	8th Gen Intel® Core™ i7-8565U
L3 Cache	4MB	6MB	8MB
TDP	25W	25W	25W
System Chipset	Integrated with Intel® SoC		
Memory	2 x DDR4L 2400MHz 4GB, Up to 64GB		
Harddisk	1 x M.2 120G SSD (250G / 500G / 2TB SSD) / 1 x mSATA		
Graphics	Intel HD Graphics 620		
Network	Intel® I211-AT GbE LAN		
Audio	Realtek ACL897 Audio controller		
TPM	TPM 2.0		
Watchdog Timer	Software Programmable Supports 1~255 sec. System Reset		
Operation System	Windows 10 / 11， Linux, Ubuntu		
I / O			
VIDEO	1 x H-DMI		
Ethernet	2 x LAN （10/100/1000 Mbps）		
USB	3 x USB 3.0 / 1 x USB 2.0		
COM	2 x RS-232 / 422 / 485 (Adjustable through BIOS)		
Audio	1x Audio_out & Mic_in		
Wireless Network	Optional （WiFi / Bluetooth / 4G / 5G ）		
Expansion			
M.2	1*M.2 (Key-E, 2230, PCIe+USB, Wifi+BT)		
	1*M.2 (Key-B, 3042/3052, PCIe/ USB 3.0+USB2.0, 4G/5G)		
SIM Socket	1x SIM Socket		
Display			
LCD Size	15" (4:3)		
Resolution	1024 x 768		
Brightness (cd/m²)	350		
Contrast Ratio	1000:1		
Backlight MTBF	50000 hrs		
Viewing Angle	89 / 89 / 89 / 89 (CR≥10) (L / R / U / D)		
Touch screen			
Touch Type	10 point PCAP		
Surface Hardness	≥7H		

Power	
Power Adapter	1 x Optional AC/DC 12V/5A , 60W
Power Mode	Support AT, ATX Mode
Power Input	2-pin Terminal Block Connector with Power Input 9~36VDC
Power Protection	OVP (Over Voltage Protection) | OCP (Over Current Protection) | RPP (Reverse Polarity Protectio
Power Consumption	≦45W
Physical	
Material	Aluminum alloy panel, anodized treatment
Mounting	19.0-inch Rack Mount / Stand / Wall / VESA / Panel
Dimension (W x H x D)	482 x 310 x 62 mm
Height	7U
Packing Size	500 x 180 x 450 mm
Weight (Net)	4.5 KG
Environment	
Operating Temperature	-20~70°C (-4~158°F)
Storage Temperature	-30~80°C (-22~176°F)
Relative Humidity	5%~95%@40°C, non-condensing
Vibration Protection	1.5 Grms, IEC 60068-2-64, random, 5 ~ 500 Hz, 1 hr/axis
IP Level	Front Panel IP66
EMC	CE, FCC，KC ，Class A，ROHS ，IEC / EN 62368-1

Dimension & I/O

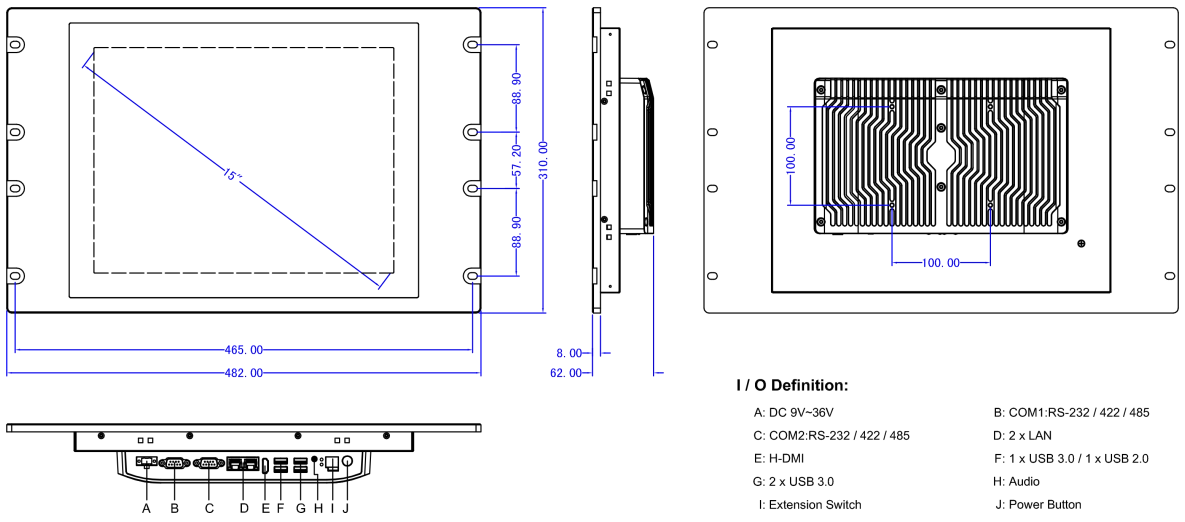

I / O Definition:

A: DC 9V~36V	B: COM1:RS-232 / 422 / 485
C: COM2:RS-232 / 422 / 485	D: 2 x LAN
E: H-DMI	F: 1 x USB 3.0 / 1 x USB 2.0
G: 2 x USB 3.0	H: Audio
I: Extension Switch	J: Power Button

Ordering info

Available models	Description
EVI-3015SRC	15" Fanless Industrial Panel PC 8th Gen Intel® Whiskey Lake Core™ i3-8145U 2.1GHz Processor With Capcice touch
EVI-5015SRC	15" Fanless Industrial Panel PC 10th Gen Intel® Comet Lake Core™ i5-10210U 1.6GHz Processor With Capcice touch
EVI-7015SRC	15" Fanless Industrial Panel PC 8th Gen Intel® Whiskey Lake Core™ i7-8565U 1.8GHz Processor With Capcice touch

Packing list

1 x Standard product
1 x Utility DVD Driver
1 x 60W PSU (Power Supply)
1 x Power cable & plug
8 x Panel mount metal clips

E-Mail: contact@evi.biz URL: https://www.evistore.fr/smartpanel.html
TEL: +33 3 57 48 03 26 | EVI SAS, 4 avenue de l'Opéra, 75001 Paris, France